2D Imager Engine

Specification Manual

The information in this document is subject to change without notice.

Document History

Model Number:	MDI-5350	Specification Number:	SS24007
Edition:	1st	Original Spec Number:	(SS24006)
Date:	26-December-2024		

Limited Warranty and Disclaimers

Please read this manual carefully before installing or using the product.

Serial Number

A serial number appears on all Opticon products. This official registration number is directly related to the device purchased. Do not remove the serial number from your Opticon device. Removing the serial number voids the warranty.

Warranty

Unless otherwise agreed in a written contract, all Opticon products are warranted against defects in materials and workmanship for two years after purchase excluding batteries. Opticon will repair or, at its option, replace products that are defective in materials or workmanship with proper use during the warranty period. Opticon is not liable for damages caused by modifications made by a customer. In such cases, standard repair charges will apply. If a product is returned under warranty and no defect is found, standard repair charges will apply. Opticon assumes no liability for any direct, indirect, consequential or incidental damages arising out of use or inability to use both the hardware and software, even if Opticon has been informed about the possibility of such damages.

Packaging

The packing materials are recyclable. We recommend that you save all packing material to use should you need to transport your scan engine or send it for service. Damage caused by improper packaging during shipment is not covered by the warranty.

Trademarks

Trademarks used are the property of their respective owners.

Opticon Inc. and Opticon Sensors Europe B.V. are wholly owned subsidiaries of OPTOELECTRONICS Co., Ltd., 12-17, Tsukagoshi 4-chome, Warabi-shi, Saitama, Japan 335-0002. TEL +81-(0) 48-446-1183; FAX +81-(0) 48-446-1184

Support

USA
Phone: 800-636-0090
Email: support@opticon.com
Web: www.opticonusa.com

Europe
Phone: +31235692728
Email: support@opticon.com
Web: www.opticon.com

Revision History

Product Name : MDI-5350

Edition	Date	Page	Section	Description of Changes
1st	2024/12/26	-	-	First release

Contents

Table of Figures

1. Abstract

This manual provides specifications for the MDI-5350 imager scan engine.

2. Overview

The MDI-5350 is a low profile, imager based, barcode scan engine with an integrated decoder, that enables high speed scanning of 1D (linear) and 2D code as well as OCR fonts.
The main features of the MDI-5350 are as follows:

- Low profile 2D imager scan engine
  The MDI-5350 with an integrated decoder is low profile at height of only 10.8mm height. This feature allows the MDI-5350 to be easily integrated into even the most compact equipment such as PDA's, data collectors and ticket readers.

- Red cross laser aiming and warm-white LED illumination
  High-visibility Class1 red cross laser aiming and efficient warm-white LED illumination supports easy aiming while ensuring safety and long battery life.

- Wide angle and high-speed reading
  The extremely high-performance decoder and horizontal 50-degree wide angle lens in the MDI-5350 ensures wide range and stress-free scanning, as well as fast response times, even when scanning poor-quality codes (damaged, low contrast etcetera), in situations where there is movement or vibration, and in poor lighting conditions.

- High-speed image sensor
  The high-speed 1 mega pixel CMOS image sensor in the MDI-5350 captures images at a speed of up to 120 fps. Combined with the fastest global shutter speed in the industry, this feature enables fast and accurate scanning.

- Low power consumption
  Power consumption in operating, standby, and low power states has been drastically minimized. Various power saving settings can be configured to optimize power consumption for your particular application.

- Data edit function
  Capable of batch reading 1D codes (up to 16 codes), 2D codes and OCR. The combined output is highly configurable using regular expressions. Also supports GS1 data conversion and code coordinate output.

- RoHS compliance
  The MDI-5350 is a RoHS compliant product, as declared by Optoelectronics Co., Ltd.

3. Physical Features

3.1. Dimensions

Imager Engine (MDI-5350) : 25.3 × 21.0 × 10.8 (WDH : mm)

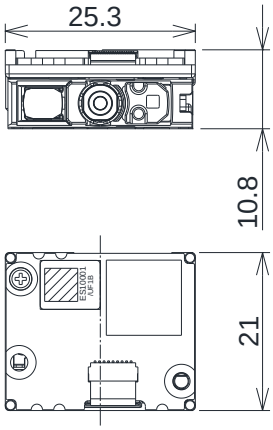

Figure 1 : Dimensions of The MDI-5350

3.2. Weight

Imager Engine (MDI-5350) : 7.3g (Max)

4. Electrical Specifications

4.1. Absolute Maximum Ratings*

Item	Symbol	Rated Value	Unit
Power Supply Voltage (V_{CC} to GND)	V_{CC}	-0.3 to 6.0	V
Input Voltage	V_I	-0.3 to V_{CC} +0.3	V

* Stresses beyond those listed under Absolute Maximum Ratings may cause permanent damage to the device. These are stress ratings only and functional operation of the device at these or any other conditions beyond those indicated under Recommended Operating Conditions is not implied. Exposure to absolute-maximum-rated conditions for extended periods may affect device reliability.

4.2. Recommended Operating Conditions

Item		Symbol	Conditions	Min.	Typ.	Max.	Unit
Supply Voltage		V_{CC}		3.0	3.3/5.0	5.5	V
Input Voltage	Low	V_{IL}	Vcc=3.0 to 3.6V	0	-	0.8	V
			Vcc=4.5 to 5.5V	0	-	0.3*V_{CC}	V
	High	V_{IH}	Vcc=3.0 to 3.6V	2.0		Vcc	V
			Vcc=4.5 to 5.5V	0.7*Vcc		Vcc	V
Output Voltage	Low	V_{OL}	I_{OL} = 100μA		-	0.55	V
	High	V_{OH}	I_{OH} = -100μA	Vcc-0.1	-	V_{CC}	V
Output current	Low	I_{OL}				-25	mA
	High	I_{OH}				25	mA

* Measured at the MDI-5350 connector

4.3. Current Consumption

(IF:UART/USB, V_{CC} = 3.3V/5.0V T_A = 25°C)

Item	State	Symbol	Conditions	Min.	Typ.	Max.	Unit
Peak Rush Current *	Boot	I_{PK}	-	-	1000		mA

* Measured at the MDI-5350 connector.

UART

[V_{CC} = 3.3V] (IF:UART, T_A = 25°C)

Item	State	Recovery time *1	Symbol	Conditions	Min.	Typ.	Max.	Unit
Operating Current	Read	-	I_{OP}	-	-	270	400	mA
Standby Current	Standby	0ms	I_{STB}	-	-	29		mA
Low Power Current	Low Power	37ms	I_{LOW}	Configured*	-	0.8		mA

[V_{CC} = 5.0V] (IF:UART, T_A = 25 °C)

Item	State	Recovery time *1	Symbol	Conditions	Min.	Typ.	Max.	Unit
Operating Current	Read	-	I_{OP}	-	-	200	300	mA
Standby Current	Standby	0ms	I_{STB}	-	-	19		mA
Low Power Current	Low Power	37ms	I_{LOW}	Configured*	-	0.6		mA

*1 Recovery time is time until ready to scan.
* Refer to “Serial Interface Specifications” for details.

USB

[V_{CC} = 3.3V] (IF:USB, T_A = 25°C)

Item	State	Recovery time *1	Symbol	Conditions	Min.	Typ.	Max.	Unit
Operating Current	Read	-	I_{OP}	-	-	310	420	mA
Standby Current	Standby	0ms	I_{STB}	*2	-	68		mA
Low Power Current	Low Power	37ms	I_{LOW}	Configured* *2	-	1.0		mA

[V_{CC} = 5.0V] (IF:USB, T_A = 25°C)

Item	State	Recovery time *1	Symbol	Conditions	Min.	Typ.	Max.	Unit
Operating Current	Read	-	I_{OP}	-	-	205	320	mA
Low Power Current	Standby	0ms	I_{STB}	*2	-	45		mA
Low Power Current	Low Power	37ms	I_{LOW}	Configured* *2	-	0.8		mA

*1 Recovery time is time until ready to scan.
*2 Current value when USB is “Selective Suspend” mode. When using as USB-COM (USB as virtual COM), use USB driver “Opticon USB Code Reader driver” version 3.x.x.x.
* Refer to “Serial Interface Specifications” for details.

4.4. Current Waveform

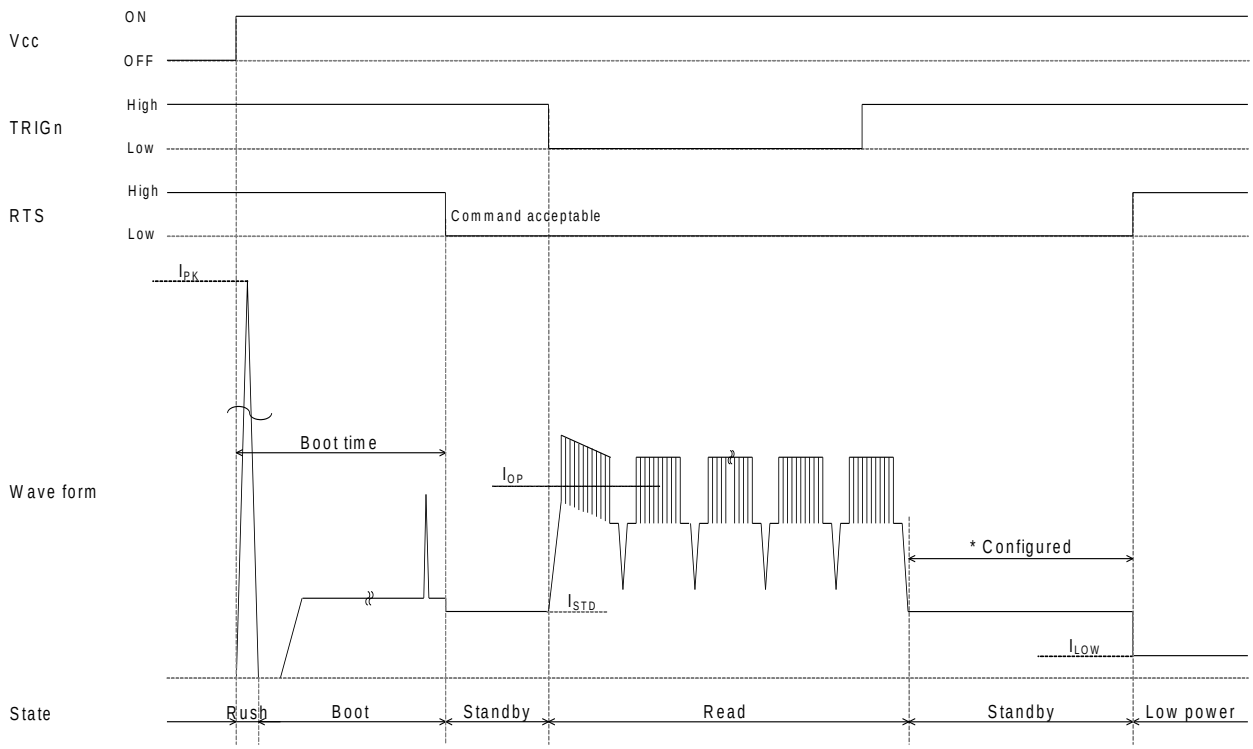

* When Low Power Mode is enabled, the MDI-5350 automatically enters Low Power state after Power On.

Figure 2 : Current Waveform

5. Power Mode Transition

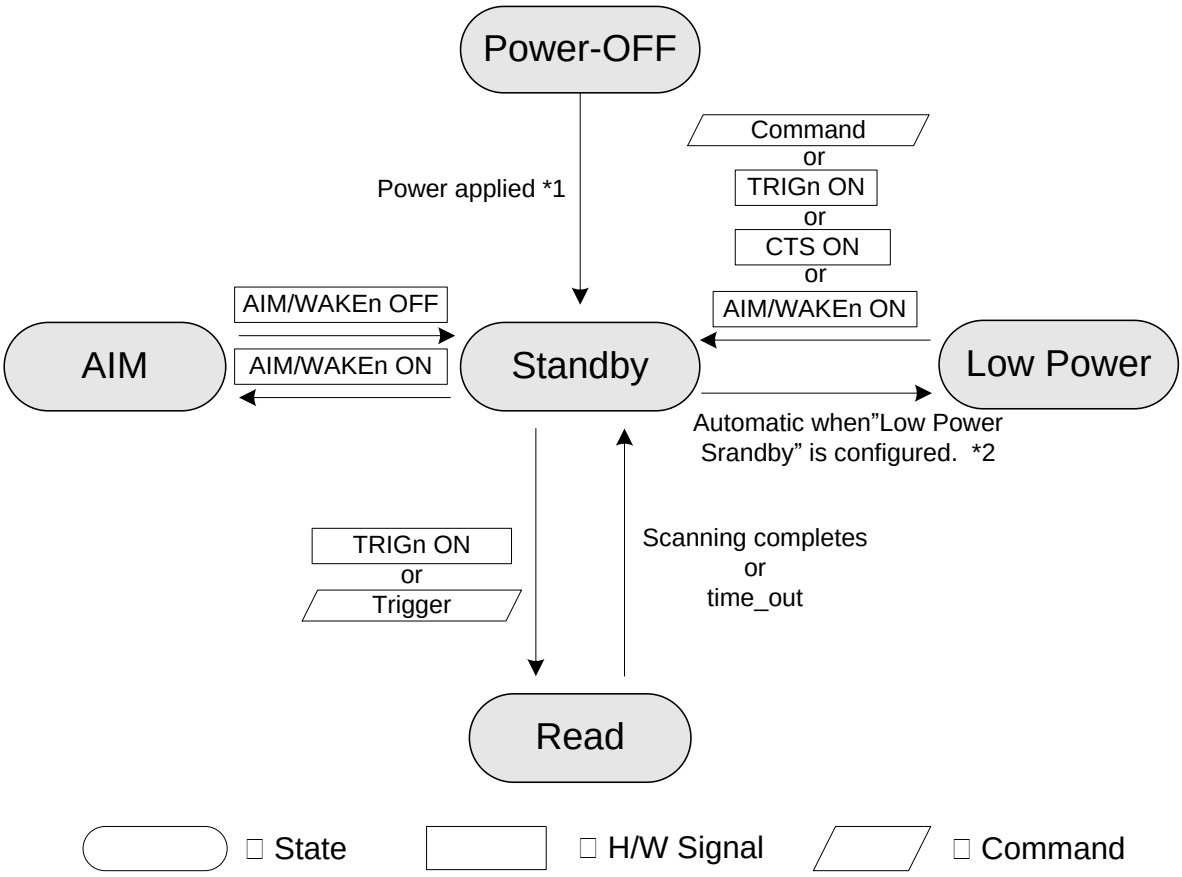

*1 Options are available that adjust the start-up time: Fast Boot and Normal Boot
*2 When Low Power is enabled, the MDI-5350 automatically enters Low Power mode when Standby state passed the specified time.

Figure 3 : Power Mode Transition

Status	Description
Read	White LED illumination and laser aiming light and process reading.
Standby	Ready to read. The state which can read immediately.
Low Power	Low current consumption status. The time to shift from standby is configurable.
AIM	With AIM signal is ON, Laser aiming lights.

6. Interface Specifications

6.1. Interface Signals

Connector used is equivalent to the one produced by IRISO Electronics Co., Ltd.
Product No.: 9681S-12 (12pin, 0.5mm pitch bottom contact, 0.3mm thick FPC/FFC connector)

No.	Name	Function	I/O	Conditions	State	Note
1	TRIGn	Trigger	In		L: Start operation H: No action	100kΩ pull up on scan engine
2	AIM/WAKEn	Recovery signal from Low Power state	In		L: Recover from low power state H: No action	100kΩ pull up on scan engine
		Aiming control signal in other states than Low Power	In		L: Aiming Laser on H: Aiming Laser off	
3	GR_LEDn	Good read LED	Out		L: LED on H: LED off	4.7kΩ pull up on scan engine
	EX_ILLUM	Control of an external light source.	Out	Configured	L: External Illumination On H: External Illumination Off	
4	BUZZERn	Buzzer	Out		ACTIVE: PWM signal (frequency and duration configurable) IDLE: Steady high or low (configurable idle state)	A transistor or FET should be used to drive a buzzer. 100kΩ pull up on scan engine
5	POWERDWN	Indicates Low Power state	Out		L: Normal state H: Low Power state	4.7kΩ pull up on scan engine
6	RTS	Communication control signal to host system	Out			10kΩ pull up on scan engine
7	CTS	Communication control signal from host system	In	Interface configured as UART		100kΩ pull up on scan engine
	USB+	D+ signal for USB	In/ Out	Interface configured as USB		
8	TxD	Transmitted data signal	Out			10kΩ pull up on scan engine
9	RxD	Received data signal	In	Interface configured as UART		100kΩ pull up on scan engine
	USB-	D- signal for USB	In/ Out	Interface configured as USB		
10	GND	System ground				
11	V_{CC}	Power input	In		3.3V / 5.0V	
12	Reserve		In			N.C

* Refer to “Serial Interface Specifications” for details.

6.2. Interface Circuit

Signal Name	Circuit
AIM/WAKEn RxD CTS	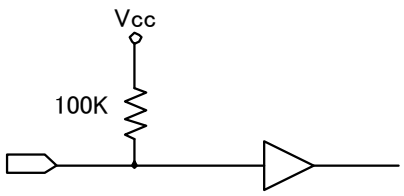
TRIGn	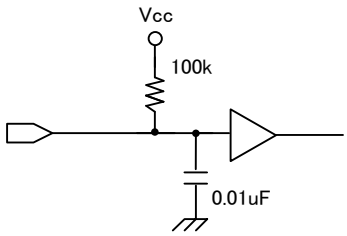
RTS TxD	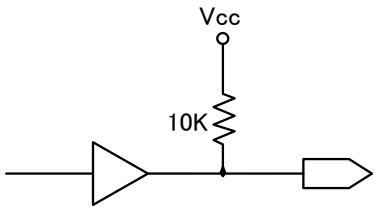
GR_LEDn	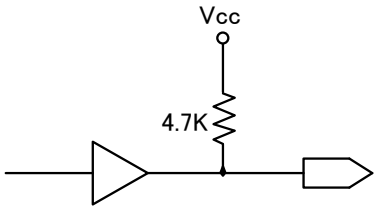
BUZZERn POWERDWN	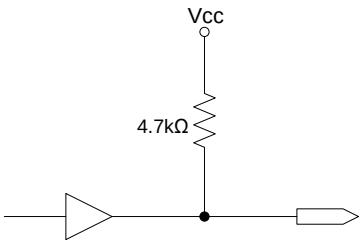
USB+ USB-	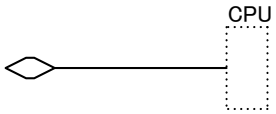

Figure 4 : Interface Circuit

7. Optical Specifications

7.1. Basic Optical Specifications

Item		Characteristics
Scan method	CMOS area sensor (Monochrome)	-
Number of effective pixels	(H) × (V)	1280 × 800 pixel
Image capture speed	Frame rate*1	120 fps
Focal distance	From the front edge of scan engine	Approx. 200 mm
View angle	Horizontal	Approx. 50.0°
	Vertical	Approx. 32.0°
	Diagonal	Approx.58.0°
Auxiliary light source (LED × 1)	LED	Warm white
	Color temperature	Approx.2700K
	Maximum Optical Efficiency *2	150 lm/W
Light source for aiming (Laser x 1)	Red Laser diode	Red cross
	Peak Wavelength	655nm
	Maximum Optical Efficiency *2	390uW (Class1)

*1 The fastest speed of image capture.
*2 The reference value extracted from the LED datasheet.

7.2. Aiming Specifications

The aiming specifications are as follows:

The following specifications can be met under the condition of L=125 mm distance from the front edge of the camera module:

- Aiming center
  The center of aiming goes through a circle with a radius 10 mm, centered at the optical axis of the imaging system.

- Aiming pattern width
  The horizontal aiming width is 56±10% of the horizontal FOV width.
  The vertical aiming width is 25±10% of the vertical FOV width.

- Aiming ratio
  The ratio of left to right width from the center of horizontal aiming ‘r’ is 0.85 < r < 1.18.
  The ratio of up to down width from the center of vertical aiming ‘R’ is 0.85 < R < 1.18.

- Aiming tilt
  The inclination of horizontal aiming line to the horizontal FOV is within ±2°.

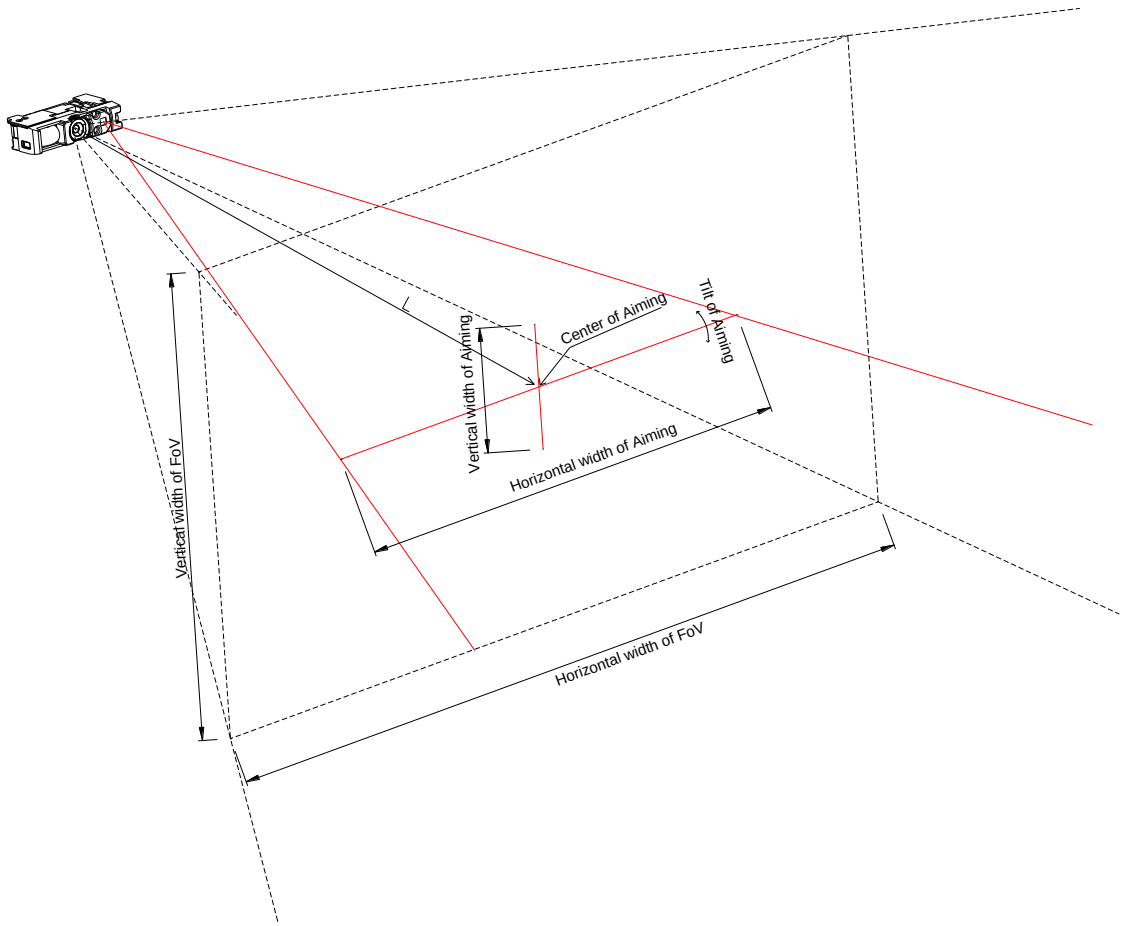

Figure 5 : Aiming Pattern

8. Technical Specifications

The conditions for technical specifications are as follows, unless otherwise specified in each section.

Conditions	
Ambient Temperature and Humidity	Room temperature and room humidity
Ambient Light	100 to 500 lux (on the surface of a barcode)
Tilt	α = 0°, β = 15°
Code Position	Center of the image
Curvature	R = ∞
Power Supply Voltage	3.3 and 5.0 V
PCS (1D and 2D)	0.9 or higher
Scanning Test	Accept the performance with 90% or more success rate for 10 scan attempts.
Barcode Test Sample (1D and 2D)	Specified below

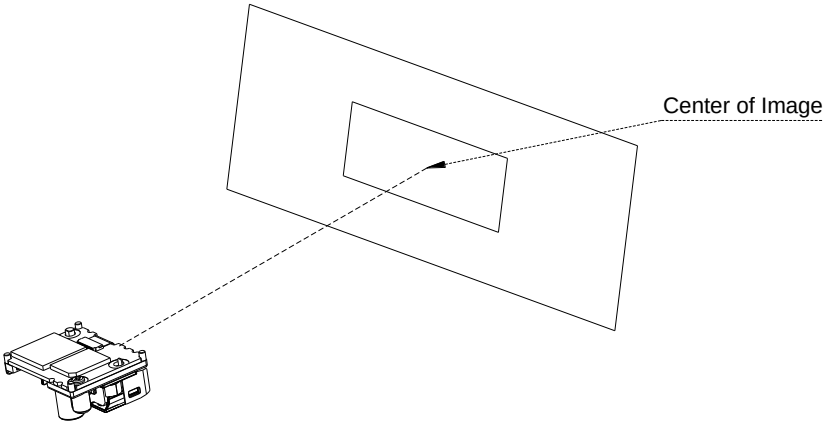

Figure 6 : Test Condition of Depth of Field

8.1. Test Chart Labels

1D Barcode test labels

Code 39

Resolution	Symbology	PCS (MRD)	Size (mm)	No. of Digits
0.076 mm (3 mil)	Code 39	0.9 (80)	8 × 10	5
0.127 mm (5 mil)			11 × 10	4
0.20 mm (7.9 mil)			110 × 10	34
0.254 mm (10 mil)			32.5 × 10	7
0.508 mm (20 mil)			43 × 25	4

Code 128

Resolution	Symbology	PCS (MRD)	Size (mm)	No. of Digits
0.20 mm (7.9 mil)	Code 128	0.9 (80)	42 × 10	16

UPC/EAN

Resolution	Symbology	PCS(MRD)	Size (mm)	No. of Digits
0.330 mm (13 mil)	UPC/EAN	0.9/0.2	31.5 × 24.5	12/13

GS1 DataBar / Composite test labels

GS1-limited

Resolution	Symbology	PCS(MRD)	Size (mm)	No. of Digits
0.127 mm (5.0 mil)	Limited	0.9 (80)	9 × 1.3	14
0.127 mm (5.0 mil)	Limited-Composit		9 × 2.5	26

2D Codes test labels

PDF417

Resolution	Error Correction	PCS(MRD)	Size (mm)	No. of Character
0.127 mm (5.0 mil)	Level-3	0.9 (80)	17.3 × 7.5	58
0.254 mm (10 mil)			35 × 15	

QR Code: Model-2

Resolution	Error Correction	PCS(MRD)	Size (mm)	No. of Character
0.127 mm (5 mil)	M	0.9 (80)	3.6 × 3.6	44
0.381 mm (15 mil)			11 × 11	

Data Matrix

Resolution	Model	PCS(MRD)	Size (mm)	No. of Character
0.127 mm (5.0 mil)	ECC200	0.9 (80)	3 × 3	40
0.254 mm (10 mil)			6 × 6	

Note: The size is outline dimensions excluding quiet zone.

8.2. Scan Area and Depths of Field

The scan area is measured from the front edge of the engine.

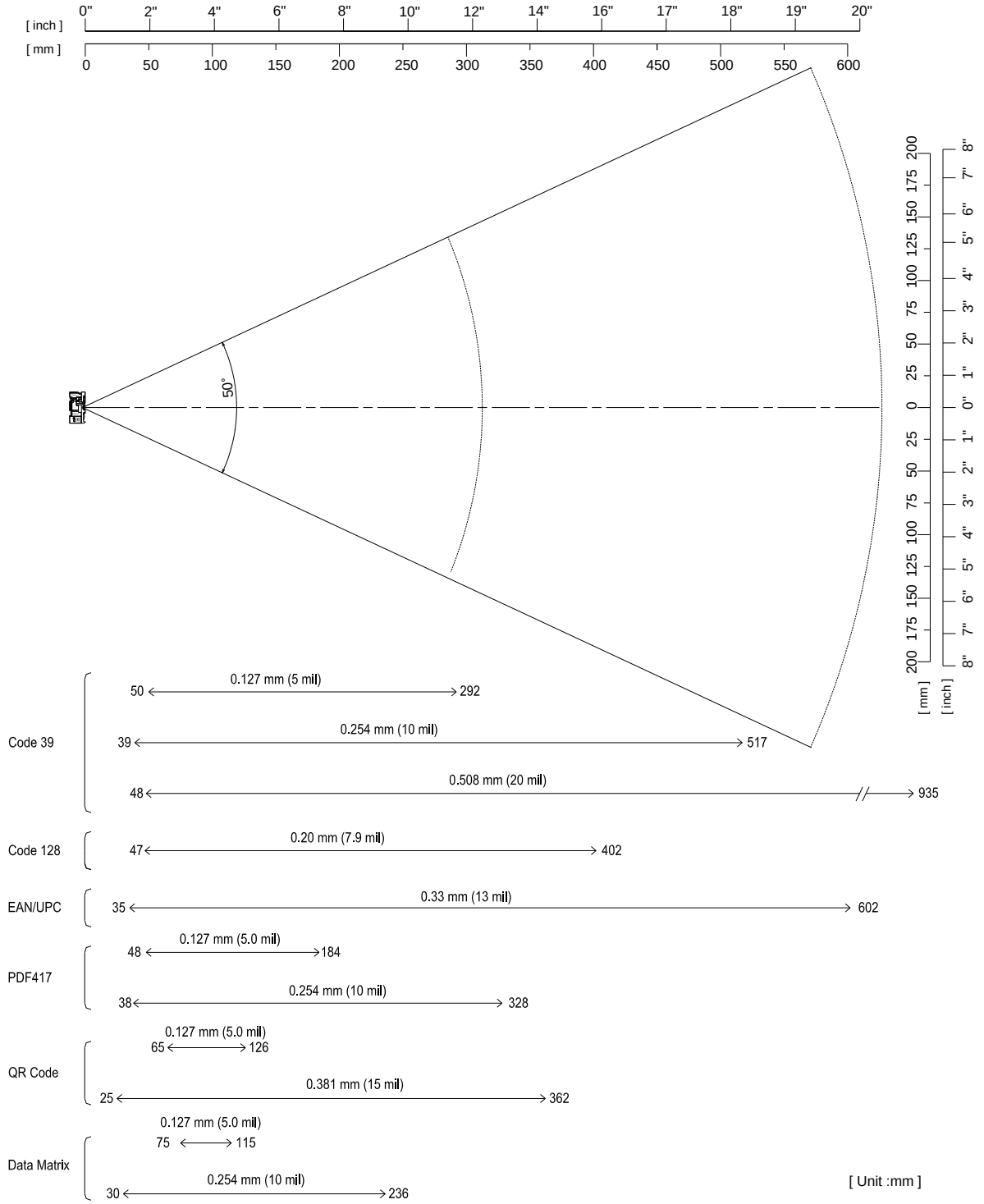

Note: The depth of field depends on the view angle and symbol length.
The depth of field values mentioned are the typical values measured at an ambient temperature of 25°C.

Figure 7 : Scan Area and Depth of Field

8.3. Depths of Field

The scan area is measured from the front edge of the scan engine.

(T_A = 25C)

Resolution mm (mil)	Symbology type	PCS (MRD)	Guaranteed Value		Typical Value	
			Near	Far	Near	Far
0.127 mm (5 mil)	Code 39	0.9 (0.8)	61 mm (2.4″)	152 mm (6.0″)	50 mm (2.0″)	292 mm (11.5″)
0.254 mm (10 mil)	Code 39	0.9 (0.8)	49 mm (1.9″)	290 mm (11.4″)	39 mm (1.5″)	517 mm (20.4″)
0.508 mm (20 mil)	Code 39	0.9 (0.8)	57 mm (2.2″)	553 mm (21.8″)	48 mm (1.9″)	935 mm (36.8″)
0.2 mm (7.9 mil)	Code 128	0.9 (0.8)	57 mm (2.2″)	233 mm (9.2″)	47 mm (1.9″)	402 mm (15.8″)
0.33 mm (13 mil)	UPC/EAN	0.9 (0.8)	44 mm (1.7″)	360 mm (14.2″)	35 mm (1.4″)	602 mm (23.7″)
0.127 mm (5.0 mil)	PDF417	0.9 (0.8)	61 mm (2.4″)	145 mm (5.7″)	48 mm (1.9″)	184 mm (7.2″)
0.254 mm (10 mil)	PDF417	0.9 (0.8)	47 mm (1.9″)	269 mm (10.6″)	38 mm (1.5″)	328 mm (12.9″)
0.127 mm (5.0 mil)	QR Code	0.9 (0.8)	90 mm (3.5″)	100 mm (3.9″)	65 mm (2.6″)	126 mm (5.0″)
0.381 mm (15 mil)	QR Code	0.9 (0.8)	36 mm (1.4″)	300 mm (11.8″)	25 mm (1.0″)	362 mm (14.3″)
0.127 mm (5.0 mil)	Data Matrix	0.9 (0.8)	90 mm (3.5″)	98 mm (3.9″)	75 mm (2.9″)	115 mm (4.5″)
0.254 mm (10 mil)	Data Matrix	0.9 (0.8)	41 mm (1.6″)	199 mm (7.8″)	30 mm (1.2″)	236 mm (9.3″)

Note: The depth of field depends on the view angle and symbol length.
The depth of field values mentioned are the typical values measured at an ambient temperature of 25°C.

8.4. Print Contrast Signal (PCS)

PCS 0.2 or higher

Conditions

MRD	13 and higher (70% or higher reflectivity of space and quiet zone)
Barcode Sample	UPC specified in Chapter 8. (Resolution: 0.33 mm, PCS: 0.2)

MRD = Minimum reflectance of white space - Maximum reflectance of black bar

$$PCS = \frac{\text{Reflectance of white space} - \text{Reflectance of black bar}}{\text{Reflectance of white space}}$$

8.5. Minimum Resolution

1D Code	0.076 mm (3.0 mil)	Code 39 specified in Chapter 8
GS1-DataBar	0.127 mm (5.0 mil)	GS1 DataBar Limited specified in Chapter 8
Stacked Code	0.127 mm (5.0 mil)	PDF417, GS1 DataBar Limited Composite specified in Chapter 8
2D Code	0.127 mm (5.0 mil)	QR Code and Data Matrix specified in Chapter 8

Conditions

Angle	α = 0°, β =+15°
Curvature	R = ∞

8.6. Barcode Width

110 mm

Conditions

Barcode Sample	0.20 mm Code 39 specified in Chapter 8
Distance	180 mm from the front edge of the scan engine
Angle	α = 0°, β =+15°
Curvature	R = ∞

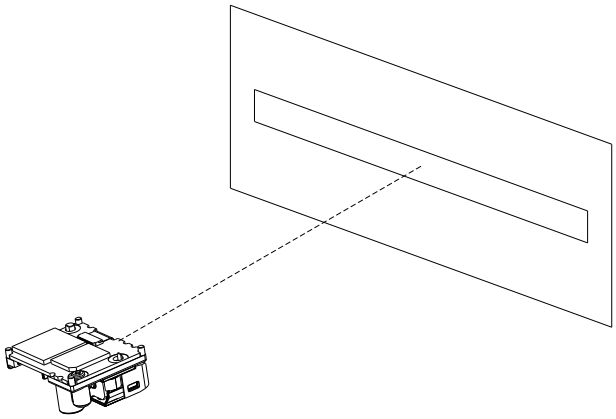

Figure 8 : Barcode Width

8.7. Pitch, Skew, and Tilt

Pitch : α = ±65°
Skew : β = ±65°
Tilt : γ = 360°

Conditions

Barcode Sample	0.5 mm Code 39 specified in Chapter 8
Distance	180 mm from the front edge of the scan engine
Curvature	R = ∞

For pitch angle and tilt angle measurements, set the skew angle β to +15°

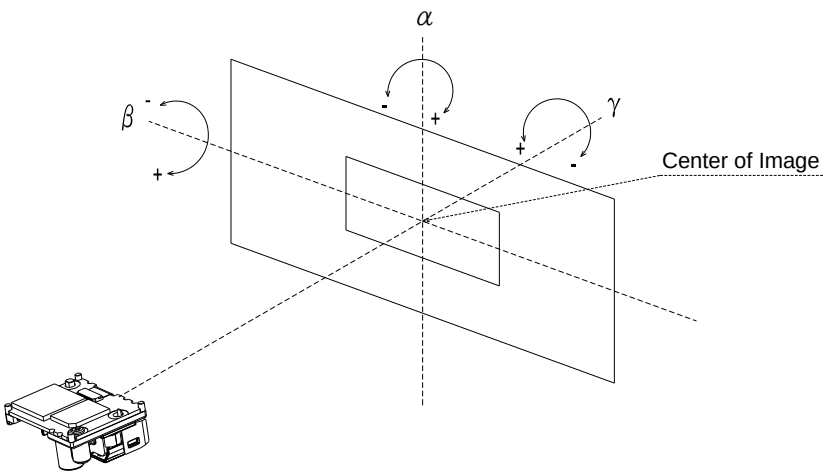

Figure 9 : Pitch, Skew, and Tilt

8.8. Curvature

0.33 mm 12-digit UPC R ≧ 20 mm

Conditions

Barcode Sample	0.33 mm UPC specified in Chapter 8
Distance	180 mm from the front edge of the scan engine
Angle	α = 0°, β =＋15°

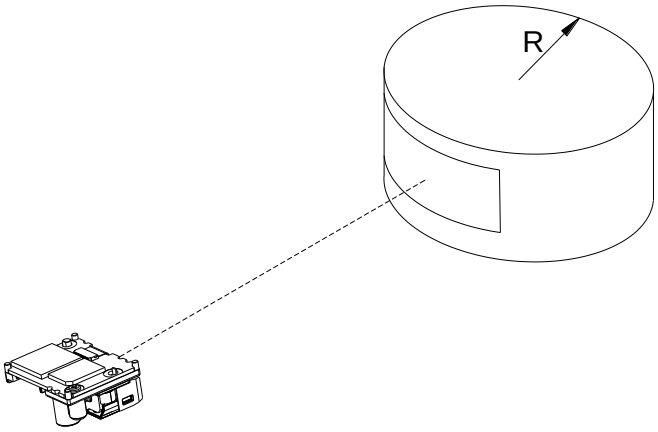

Figure 10 : Curvature

8.9. Motion Tolerance

2.54 m/s

Conditions	
Ambient Temperature and Humidity	Room temperature and Room humidity
Ambient Light	500 lux to 1000 lux (on the surface of the barcode)
Distance	130 mm from the front edge of the scan engine
Skew	α = 0°, β =+15°
Curvature	R = ∞
PCS	0.9 or higher
Barcode Sample	UPC with 0.33 mm resolution specified in Chapter 8

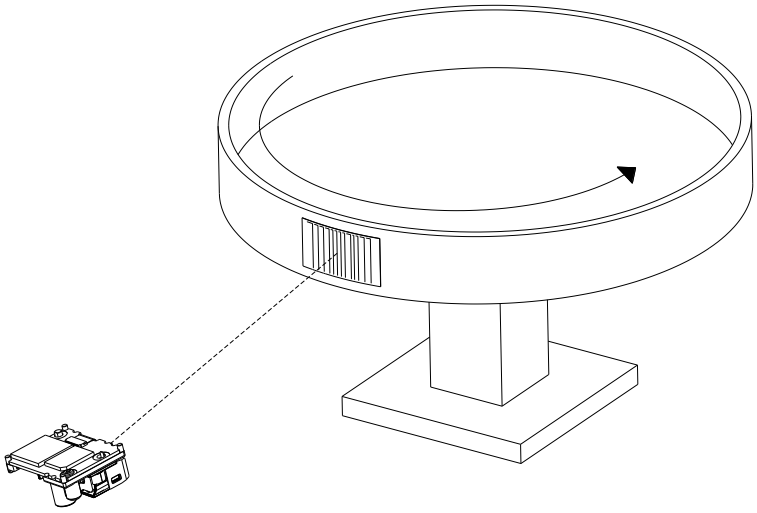

Note: Successful reading at the indicated speed cannot be guaranteed. Reading may fail due to specular reflection of the illumination LED when the reflectivity is high.

Figure 11 : Motion Tolerance

9. Environmental Specifications

9.1. Temperature

Operating Temperature	-20 to 60 °C
Storage Temperature	-40 to 70 °C

Conditions

Barcode Sample	0.33 mm UPC specified in Chapter 8
Distance	130 mm from the front edge of the scan engine
Angle	α = 0°, β =+15°
Curvature	R = ∞
Scanning Test	Read at intervals of 300 ms
Power Supply Voltage	3.3 and 5.0 V

9.2. Temperature

Operating Humidity	5 to 90% RH (no condensation, no frost)
Storage Humidity	5 to 90% RH (no condensation, no frost)

Conditions

Barcode Sample	0.33 mm UPC specified in Chapter 8
Distance	130 mm from the front edge of the scan engine
Angle	α = 0°, β =+15°
Curvature	R = ∞
Power Supply Voltage	3.3 and 5.0 V

9.3. Ambient Light Immunity

Scanning performance is guaranteed when the illuminance on the surface of a barcode is between zero and the following values:

Incandescent Light	10,000 lux
Fluorescent Light	10,000 lux
Sunlight	100,000 lux

Conditions

Barcode Sample	0.33 mm UPC specified in Chapter 8
Distance	130 mm from the front edge of the scan engine
Angle	α = 0°, β =+15°
Curvature	R = ∞
Power Supply Voltage	3.3 and 5.0 V

Note: Scanning performance is guaranteed as long as direct ambient light and specular reflection from the illumination LED does not enter the light receiving section of the MDI-5350.

9.4. Electrical Noise

a) Scanning Symbologies
There shall be no abnormalities in the output signals when sinusoidal electrical noise (50 Hz to 100 kHz, smaller than 0.1 Vp-p) is added to the power supply line.

Conditions	
Scan Method	Continuous scanning
Barcode Sample	0.33 mm UPC specified in Chapter 8
Distance	130 mm from the front edge of the scan engine
Angle	α = 0°, β =+15°
Curvature	R = ∞
Scanning Test	Read at intervals of 300 ms
Power Supply Voltage	3.3 and 5.0V

b) Image Data Acquisition
There shall be no excessive noise or misalignments in acquired images when sinusoidal electrical noise (50 Hz to 100 kHz, smaller than 20 mVp-p) is added to the power supply line.

Note: There may be a case where the electrical noise affects the quality of captured images. The signal processing system of the MDI-5350 is especially designed for the purpose of scanning symbologies but not for the acquisition of image data. Therefore, the quality of captured images of the MDI-5350 may be lower than that of general purpose digital cameras.

9.5. Vibration Strength

There shall be no sign of malfunction of the MDI-5350 after the following test.
Vibration Test: Increase the frequency of the vibration from 12Hz to 200Hz at accelerated velocity 32.3m/s^2(3.3G) for ten minutes. Continue this routine for 2 hours to X-direction, 2 hours to Y-direction and 4 hours to Z-direction.

Conditions	
Barcode Sample	0.33 mm UPC specified in Chapter 8
Distance	130 mm from the front edge of the scan engine
Angle	α = 0°, β =+15°
Curvature	R = ∞
Power Supply Voltage	3.3 and 5.0 V

9.6. Drop Impact Strength

There shall be no sign of malfunction of the MDI-5350 after the following test.
Drop test: Fix the MDI-5350 in a specific aluminium made dummy case 100x70x50 (WDH mm) and drop it 10 times in total, at top, bottom, front, back, left, right, top-left, top-right, bottom-left and bottom-right faces, from a height of 1.8 meters onto a concrete floor.

Conditions	
Barcode Sample	0.33 mm UPC specified in Chapter 8
Distance	130 mm from the front edge of the scan engine
Angle	α = 0°, β =+15°
Curvature	R = ∞
Power Supply Voltage	3.3 and 5.0 V

10. Environmental Specifications

Connection between the MDI-5350 and a host system:

Use a FFC or FPC cable developed in accordance with specifications provided by the connector manufacturer to connect the MDI-5350 with the host system.

The connector used is produced by IRISO Electronics Co., Ltd.

Product No.	9681S-12 (12pin, 0.5mm pitch, 0.3mm thick)
Recommended Cable Length	Max. 50 mm. The resistance caused by the length of the cable must not drop the voltage to the imager engine below 3.0 V. For USB connections, design the differential impedance of the transmission line to be 90Ω±15%.

11. Regulatory Specifications

11.1. LED Safety

IEC 62471: 2006 Risk Group 1

11.2. Laser Safety

IEC 60825-1:2014 Class 1
EN 60825-1:2014 +A11:2021/EN 50689:2021 Class 1
JIS C 6802:2014 Class 1

12. RoHS

The MDI-5350 is compliant with RoHS.

Note: RoHS: The restriction of the use of certain hazardous substances in electrical and electronic equipment.
Directive 2011/65/EU
Commission Delegated Directive (EU) 2015/863

13. Reliabilities

MTBF (mean time between failures) of this product except for laser diode is 375,419 hours.
The life cycle of laser diode is 10,000 hours.

14. Precautions

- All work-benches, tools, measuring instruments and any part of the human body which may come into contact with the MDI-5350 must undergo antistatic treatments.
- Do not touch the optical and electrical components. Hold it on the camera body when handling the MDI-5350.
- Avoid handling the MDI-5350 in a dusty area. In case dust gets on the MDI-5350, gently blow it off with dry air. Direct contact of swabs and such on its optical part may cause deterioration of its performance.
- Do not drop the MDI-5350.

15. Product Label

The product labels are affixed to the MDI-5350 as shown below.

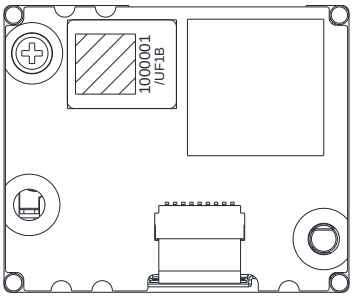

The details of the label are as follows.

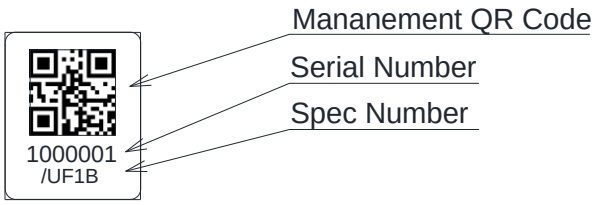

The serial number (seven-digit) starts from 1000001 and is sequentially numbered.

Figure 12 : Product Label

16. Packaging Specifications

16.1. Packaging

A carton box: 280 pieces MDI-5350 (MAX)

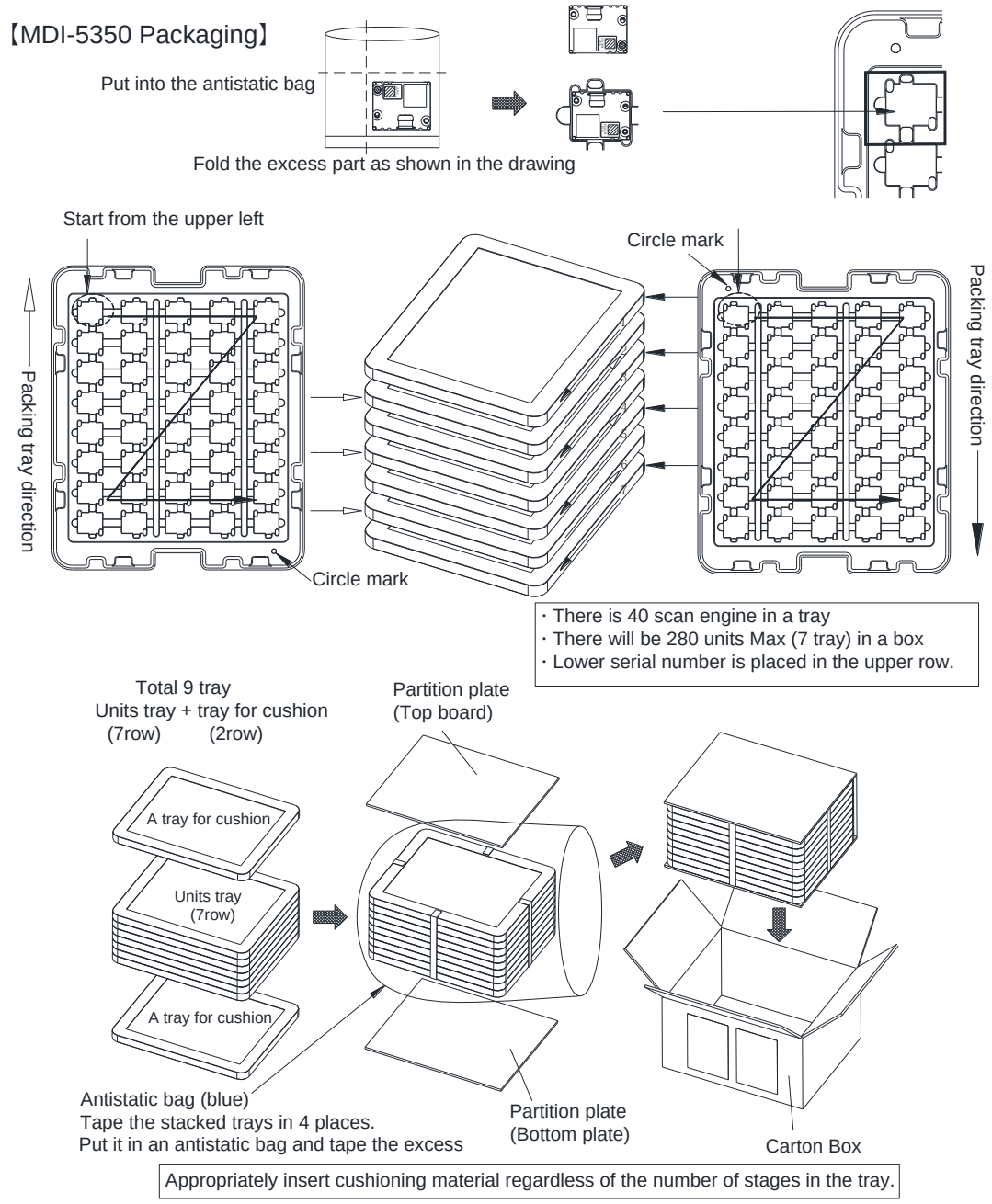

Figure 13 : Packaging

16.2. Packaging

365 × 295 × 225 (WDH mm) (Outside dimensions)

Note: The “RO” mark labelled on the package tray or package box guarantees that the applicable product has passed our test of RoHS restrictions compliance (The restriction of the use of certain hazardous substances in electrical and electronic equipment, Directive 2011/65/EU, Commission Delegated Directive (EU) 2015/863.). However, this mark does not have any legal weight in the European Union.

17. Mechanical Drawing

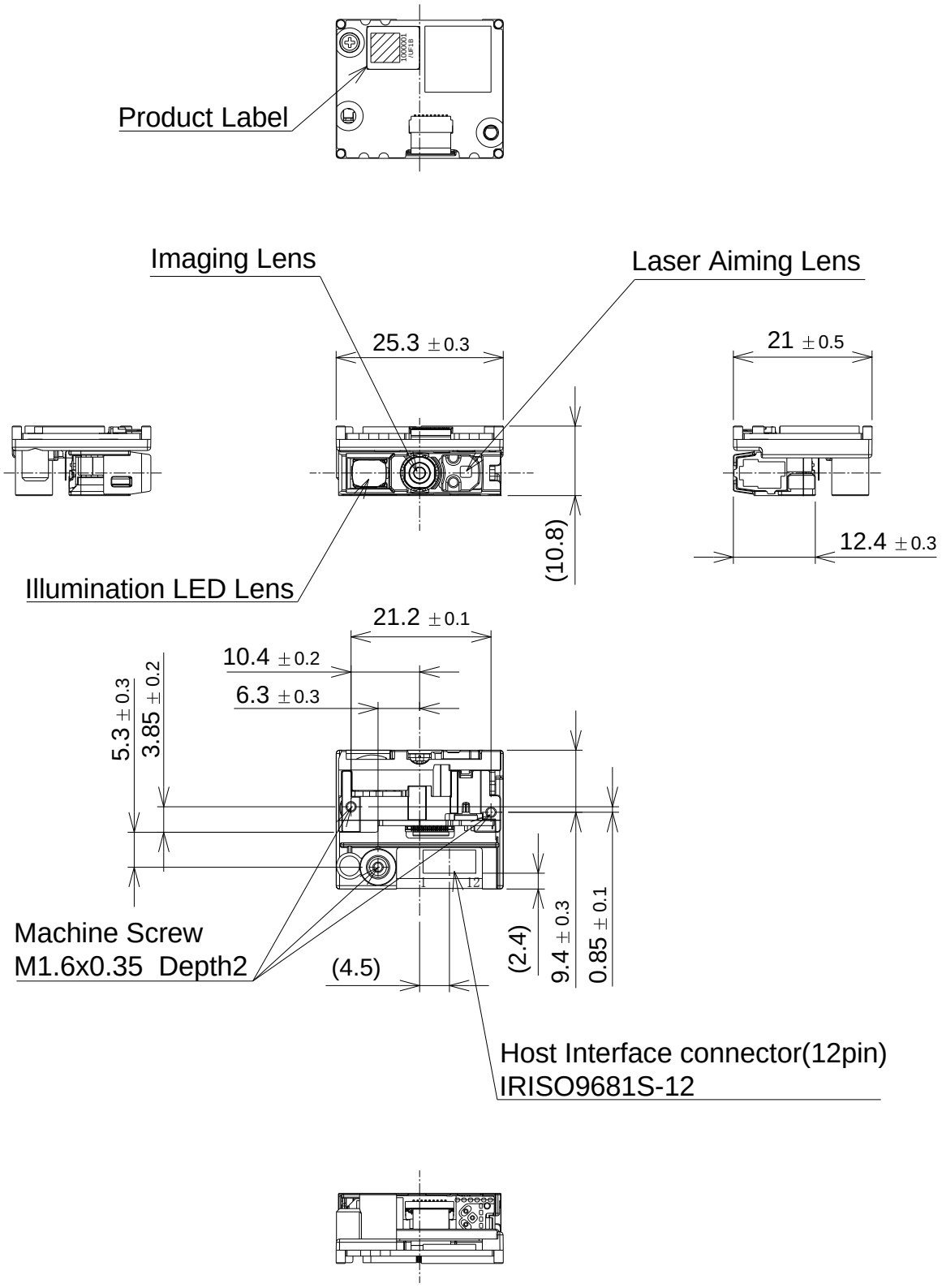

[Unit :mm]

Figure 14 : Drawing (MDI-5350)